Integrated Skylight Luminaire

The integrated skylight luminaire (ISL) is a single product that offers a skylight, an electric lighting system, and a controls system all in one. It is designed to provide general lighting for high-ceiling buildings such as factories, warehouses, and big-box retail stores, replacing traditional high-intensity discharge lighting systems. The ISL has the potential to save substantial energy because it is designed to dim or switch the electric lighting when daylight is sufficient, and it improves the visual environment because it controls sunlight distribution.

Features of the ISL

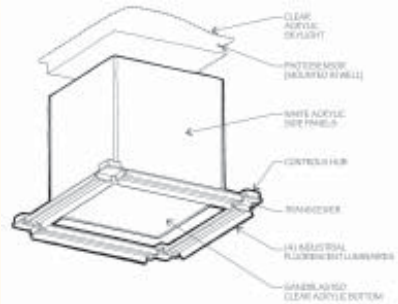

- Works under sunny and overcast conditions
- Is composed of readily available hardware
- Captures energy savings automatically
- Controls glare
- Is easy to install and maintain
- Has a control system capable of dimming and switching
- Sets the photosensor control algorithm easily with a hand-held wireless commissioning device

ISL development

The development team of architects, lighting designers, optical designers, human factors specialists, and engineers completed the following:

- Developed ISL prototypes using both a non-imaging collector and a standard skylight; computer simulations for the Northeast climate showed that the standard skylight with a larger area performed better than the non-imaging collector
- Custom-designed a controls system to streamline the commissioning process
- Considered various electric lighting components, glazing options, concentrators, and diffusers
- Evaluated cost, glare control, transmittance under clear and overcast skies, illuminance, uniformity, and whole-building energy use in northeastern U.S. climates
- Used design software, physical models, and whole-building energy simulation programs

The standard skylight prototype was installed at the Lighting Research Center (LRC) and reviewed by a roundtable of manufacturers, energy efficiency program managers, architects, engineers, and designers.

Typical daily lighting energy use, ISL demonstration site

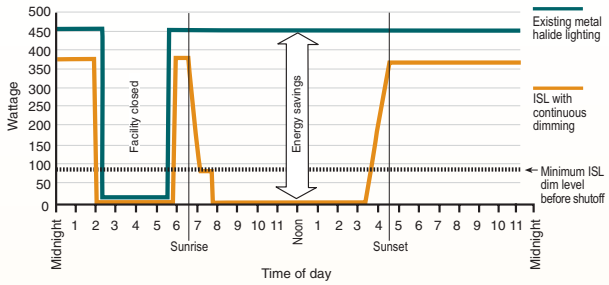

Energy savings from three ISLs, March–November 2002

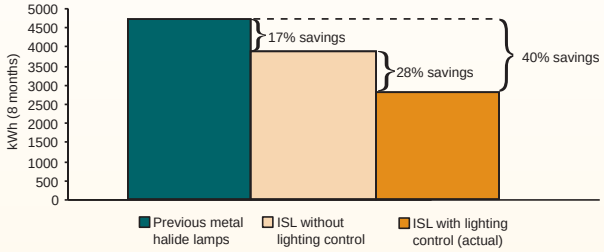

ISL demonstration

Four ISLs were installed in a warehouse in Norwich, Connecticut. Energy savings, occupant satisfaction, and improvement opportunities were reported in a *Field Test DELTA* publication.

Future work

Manufacturers are invited to commercialize the ISL. The lighting control system developed by the LRC will be made available to interested manufacturers.

Sponsors

Connecticut Light & Power (CL & P)

New York State Energy Research and Development Authority (NYSERDA)

Lightolier (site and material)

Rensselaer

Lighting Research Center

Lighting Research Center, Rensselaer Polytechnic Institute • 21 Union Street • Troy, NY 12180 • (518) 687-7100 • www.lrc.rpi.edu